MSMD030HCQ
CONDENSING UNIT

Note: Pictures are for illustration only, and may not reflect the listed model.

MADE IN

GENERAL						
REFRIGERANT	**VOLTAGE**	**COMPRESSOR TYPE**	**COMPRESSOR MODEL**	**HP**	**AWEF**	**LISTINGS**
R-448A/R-449A	208-230/60/3	Scroll	ZS21KAE-TF5	3	5.61	UL/CUL

BTUH CAPACITY (At Saturated Suction Temperature (SST) and 90^0 Ambient at Condenser)							
-30	**-20**	**-10**	**20**	**25**	**30**	**35**	**45**
-	-	-	25,324	27,826	30,467	33,250	39,230

BTUH CAPACITY (At Saturated Suction Temperature (SST) and 100^0 Ambient at Condenser)							
-30	**-20**	**-10**	**20**	**25**	**30**	**35**	**45**
-	-	-	23,298	25,600	28,030	30,590	36,092

DIMENSIONAL DATA					
OVERALL (to nearest inch)					
L	**W**	**H**	**WT (lbs)**	**BASE SIZE**	**BASE/HOOD**
30	31	26	250	M3	031M

INSTALLATION					
	RECEIVER TANK (lbs)	**CONNECTIONS**		**With Quick-Connects**	**ESTIMATED TOTAL**
REFRIGERANT	**90%/90˚F**	**LIQUID**	**SUCTION**	**and Precharged Refrigerant**	**HEAT REJECTION (BTUH)**
R-448A/R-449A	15.2	1/2	7/8		37,134

ELECTRICAL								
MCA	**MOP**	**COMP VOLTS**	**COMP PHASE**	**COMP HZ**	**COMP RLA**	**COMP LRA**	**OTHER LOAD DATA**	
31	35	208-230	3	60	13.7	93		
FAN PHASE	**FAN HZ**	**FAN FLA**	**FAN HP**	**FAN QUANTITY**	**MAX EVAP FAN AMPS**	**MAX EVAP DEF HEATER AMPS**	**VOLTS**	208-230
							PHASE	1
1	60	1.6	1/4	1	12	25.0	**AMPS**	0.5

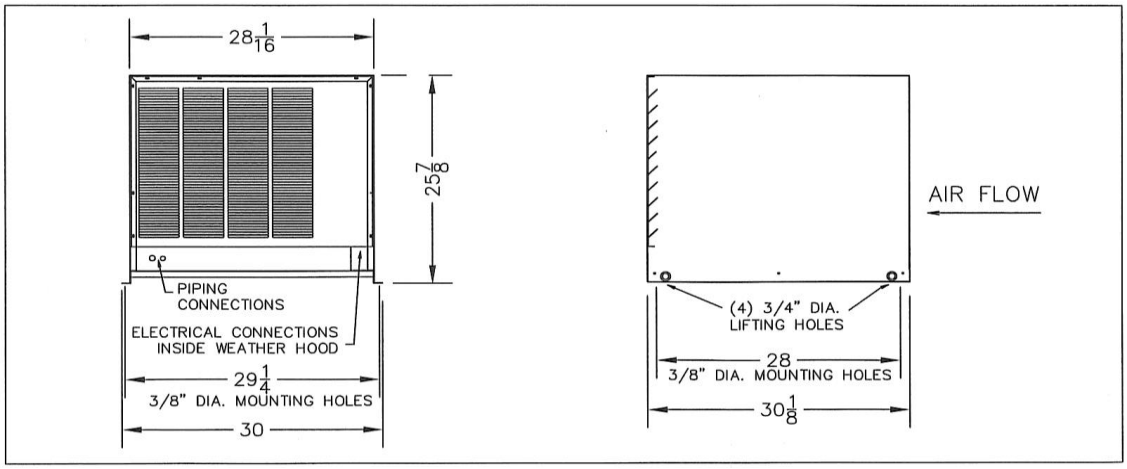

All specifications subject to change without notice. ©2022, Refrigerated Solutions Group®. All rights reserved.
891 County Road U ▪ Hudson, WI 54016 ▪ Phone: (800) 955-5253
Date published: 03/02/2022